BrightnESS

Building a Research Infrastructure and Synergies for Highest Scientific Impact on ESS

H2020-INFRADEV-1-2015-1

Grant Agreement Number: 676548

Deliverable Report:
D4.15 Final verification of BRR moderator

brightness

1 Project Deliverable Information Sheet

BrightnESS Project	Project Ref. No. 676548	
	Project Title: BrightnESS - Building a Research Infrastructure and Synergies for Highest Scientific Impact on ESS	
	Project Website: brightness.se	
	Deliverable No.: D4.15	
	Deliverable Type: Report	
	Dissemination Level:	Contractual Delivery Date: Month 36
	Public	Actual Delivery Date: Month 36
	EC Project Officer: Mina Koleva	

2 Document Control Sheet

Document	Title: Report on Final verification of BRR moderator	
	Version: v0-2018.08.02	
	Available at: https://brightness.esss.se	
	Files: BrESS_D4-15_Moderator task 4-5_Verification.docx BrESS_D4-15_Moderator task 4-5_Verification.pdf	
Authorship	Written by	L. Rosta
	Contributors	J. Füzi, B. Koroknai
	Reviewed by	Richard Hall-Wilton (WP4-leader) Anne-Charlotte Joubert (coordinator) Alexander Backis (Lab Assistant) Emelie Haettner (Lab Assistant)
	Approved by	Steering Board

3 List of Abbreviations

BNC – Budapest Neutron Centre
BRR – Budapest Research Reactor
CNS – Cold Neutron Source
ESPI – Energy Sensitive Pinhole Imaging
GA – Grant Agreement
LDM – Low Dimension Moderator
LEU – Low Enriched Uranium
LH – Liquid Hydrogen
MC – Monte Carlo
MCNP - Monte Carlo N-Particle code
NSD – Neutro Spectroscopy Department
VVER - Water-Water Power Reactor (a type of Russian reactors)
WRCP – Wigner Research Centre for Physics

4 List of Tables and Figures, Table of Contents

4.1 List of Tables

4.2 List of Figures

4.3 Table of Contents

5 Executive Summary

Intense neutron beams are generated by fission chain reaction at nuclear reactors or by accelerating protons and directing them at a target made of heavy metal, which then releases high-energy neutrons. Moderators adjacent to the reactor core or target slow the neutrons down to the cold and thermal energies required for experiments. Moderation inevitably leads to loss of neutron intensity, and moderator design work includes optimising geometries to minimise losses. The most efficient cold neutron moderator materials for neutron scattering purposes are hydrogen containing substances, in particular, liquid ortho/para H_2 at cryogenic temperatures. Cylindrical or spherical 'volume' moderators are in use since decades, but a detailed numerical optimization study during ESS design lead to the invention that a liquid para-hydrogen cold neutron moderator delivers much higher cold neutron brightness if it takes the form of a quasi 1 or 2-dimensional tube/disc, in contrast to the conventional more voluminous shapes used by now.

The experimental realisation – supported by extensive numerical calculations using Monte Carlo (MC) simulations – of this very new idea and its technical solutions has been undertaken in the current project. This needs complex simulation and experimental verification in various conditions. The Wigner Research Centre as a partner in the BrightnESS project has served with contributions to this task by the experience gained in the construction and operation of a similarly innovative cold neutron source at the Budapest Neutron Centre (BNC). BNC operates a cold neutron research facility, which includes a liquid hydrogen moderator inserted horizontally into the Be reflector around the reactor core, a supermirror neutron guide system and a suit of 8 experimental stations placed in a neutron guide hall. This Cold Neutron Source is an integral part of the 10 MW Budapest Research Reactor (BRR). The CNS was built in the end of nineties and the operation started in 2000. Its excellent neutron performance, cost efficiency and reliable operation proved it to be a very useful and valuable equipment.

The current BRR cold neutron facility serves in this project as an experimental benchmark facility for testing new features of the low dimension moderator (LDM) concept. In the previous part of the project (see D4.4 report) the systematic approach in the experimental verification of the compact moderator concept at an existing/operating cryogenic hydrogen moderator – for the case of a reactor neutron source – has shown a number of features which are considered as important factors influencing the design, fabrication and operation of the ESS compact moderator construction being implemented. At the cold neutron facility of the Budapest Research Reactor, a series of measurements has been performed to understand the ortho-para conversion features of hydrogen at nuclear heating conditions near to the reactor core. Very promising experimental results have been obtained, which will certainly greatly contribute to model the ESS moderator features as well as to elaborate a simplified scheme of a new CNS system for a reactor case. In particular, we assume, that a pre-cooling of hydrogen before the reactor power ramp-up the optimal para-hydrogen state can be preserved during the reactor operation. In the case of ESS, because of the very high power of the target, this option cannot be considered for a safe operation, the comparison of the two situations might, however, serve for interesting scientific-technical conclusions. The choice of materials, testing of cryogenic properties of components used in harsh irradiation environment, quality management during fabrication are relevant questions to be answered for the ESS case as well, thus the proper procedures described in this report are most relevant to be considered for the ESS LDM system. Further investigation of the ortho-para conversion features has also high interest. During the moderator tests at BNC it has been also understood that the monitoring of the homogeneity of the moderator as well as the beam take-off system has crucial importance, thus the Moderator Mapping Test Beamline device – provided also by BNC-Wigner as a part of this Work package – based on the Energy Sensitive Pinhole Imaging (ESPI) concept.

According to the tasks defined in the GA, the engineering design and implementation of low dimensional moderators at ESS and BRR should make an important impact for future development of neutron sources. Historically it has been observed that engineering realities, if poorly designed, can significantly degrade the performance of a neutron facility. Typically, moderator chamber geometry issues, temperature inhomogeneities, moderator material quality can influence the neutron intensity of the device. In addition, the moderator chamber fabrication can be difficult due to the choice of the materials, surface treatments, welding issues etc. Both institutes will therefore work together to implementing engineering concepts that will minimise losses due to engineering realities. The LDM tasks in the current phase of the projects were focused on the detailed MC simulations of the neutronics performance of the chamber according to the technical specification elaborated in the previous part. The engineering design of an LDM chamber as a tube-type moderator chamber surrounded by reflecting material has been performed for optimized ortho-para hydrogen media. The MC calculations were now performed to define the exact engineering solutions for the moderator vessel to be provided experimentally. Operation experience with the current cold source, study of materials properties for the extreme conditions, He-tightness of the system, machining and welding aspects of high precision fabrication were considered.

6 Report on Implementation Process and Status of Deliverable

6.1 Implementing team

The team of experts for the implementation of the task has continued its regular activity. The BNC cold neutron facility is operated by the MTA EK (Centre for Energy Research) and the Wigner Research Centre for Physics, EK is responsible for the CNS operation, while Wigner takes care of the beam extraction systems (guides, neutron guide hall infrastructure) and most of the experimental stations. The implementation team in this phase has been extended by experts to cover engineering, fabrication, materials testing and cryogenic tasks, thus it is composed of EK and Wigner staff, as well as external experts have also been invited for special tasks. The EK has been involved in the current part of the project as a subcontractor.

The team is as follows:

Wigner: László Rosta – team leader

János Füzi – Head of Dept. – expert in neutron instrumentation

Balázs Koroknai – project manager

Márton Markó – expert in neutron optics

László Almásy – physicist

Endre Kósa – mechanical engineer

Viktor Heirich – electric engineer

Zoltán László – materials expert

György Káli – physicist

Adél Len – physicist

Alex Szakál – expert in neutron optics

Gyula Török – materials expert

Zoltán Dudás – chemist

Tamás Veres – expert in neutron optics

EK: József Janik – CNS responsible

Ferenc Gajdos – Head, Reactor Dept. – design engineer of the current CNS

Experts: Gábor Patriskov – MCNP expert

Tamás Grósz – cold moderator expert (HNF-T Ltd)

The LDM team has regular meetings – one per month on average.

6.2 Task sharing and schedule

The LDM tasks in the current phase of the projects were focused on the detailed MC simulations of the neutronics performance of the chamber according to the technical specification elaborated in the previous part of the project (see D4.4 report). The outcome for the specific geometry of the LDM chamber was used in the detailed engineering work to design the new vessel. This task has involved experts in several types of activities, namely the operation experience with the current cold source, study of materials properties for the extreme conditions, He-tightness of the system, machining and welding aspects of high precision fabrication. This has been carefully discussed with all participants and the sharing has been coordinated by the team leader. The schedule has been assigned as a function of the project milestones and deliverable schedules.

6.3 Progress in the engineering, component verification work

At the cold neutron facility of the Budapest Research Reactor a series of measurements has been performed to understand the ortho-para conversion features of hydrogen at nuclear heating conditions near to the reactor core. We assumed, that a pre-cooling of hydrogen before the reactor power ramp-up the optimal para-hydrogen state can be preserved during the reactor operation. Thus, for a substantial modernization of the BRR cold source a compact moderator with para-hydrogen can be used without a complicated converter system. Our MC simulations support the design of an LDM and for realistic fabrication-ready documents, thus further numerical calculations were performed to support the engineering work of the specific LDM chamber to be fabricated. This was needed to optimize the neutron performance, calculate nuclear heat loads on the moderator chamber and thermo-hydraulic properties of the LDM cell. This procedure included the modelling and parameter optimization with feedback to the engineering design by reproducing a 3D document model of the current moderator vessel, and this was followed by the 3D printing of a plastic model of the chamber. This was a very useful contribution to the realization of the LDM moderator design. In parallel, the following verification tasks have been performed: Analysis of the fabrication technologies and procedures, understanding of materials properties for the choice of raw materials, and verification of measuring techniques for testing of components after machining, welding, assembling etc.

6.4 Sequence of the verification procedure

In the current phase of the project prior to component fabrication of a new LDM chamber of the specific design according to the technical specification elaborated in the previous part efforts were focused on the following procedure:

(1) Detailed MC simulations of the neutronics performance of the chamber to be fabricated. The MCNP modelling for neutronics calculations with the current reactor core configuration and Be pre-moderator geometry were considered for a given range of the LDM vessel sizes. Neutronics effects of reflector materials surrounding the new moderator cell (beryllium, lead, lead-bismuth, water) were investigated.

(2) To optimize the BRR moderator vessel configuration for better understanding of thermo-hydraulic properties a 3D printed plastic model of the current moderator cell was reproduced.

(3) In order to prepare fabrication of LDM chambers – several options, in terms of engineering solutions - a careful analysis of materials properties have been considered.

(4) We have prepared various engineering designs for the vessel geometry and machining approach.

(5) LDM chamber components were machined and their design tolerances verified.

(6) Assembly and welding of LDM chambers have been performed; He-tightness verification performed.

(7) The Moderator Mapping Test Beamline device – based on the ESPI concept has been set up.

6.5 Status of deliverable

The verification of the LDM prototype chamber components has been implemented and described below. Items in 6.4.1-6 – concerning the LDM verification itself – have been implemented and the results are presented in the current deliverable report. The implementation of manufacturing of a new LDM to install in a real reactor environment is to be performed as a follow-up activity of this project.

The detailed engineering, fabrication and verification documents have been performed by involving NMC-EK as external partner via subcontracting, as foreseen in the project contract (GA). The applicable rules of public procurement procedures were applied. Other specific works were performed by external experts via special contracts as personnel engagement or smaller volume service contracts to specialised SMEs. The selection of partners for small contracts of the various expert services were performed within the procurement rules of our centre and the GA. Such activities concern MC modelling of neutronics performances, nuclear heat load calculations, materials selection, manufacturing procedures, QA for welding etc.

7 Technical Content

7.1 Introduction

Production of cold neutrons. Intense neutron beams are generated by fission chain reaction at nuclear reactors or by accelerating protons and directing them at a target made of heavy metal, which then releases high-energy neutrons. Moderators adjacent to the reactor core or target slow the neutrons down to the cold and thermal energies required for experiments. Moderation inevitably leads to loss of neutron intensity, and moderator design work includes optimising geometries to minimise losses. The most efficient cold neutron moderator materials for neutron scattering purposes are hydrogen containing substances, in particular, liquid ortho/para H_2 at cryogenic temperatures. Cylindrical or spherical "volume" moderators are in use since decades, but a detailed numerical optimization study during ESS design lead to the invention that a liquid para-hydrogen cold neutron moderator delivers much higher cold neutron brightness if it takes the form of a quasi 1 or 2-dimensional tube/disc, in contrast to the conventional more voluminous shapes used by now.

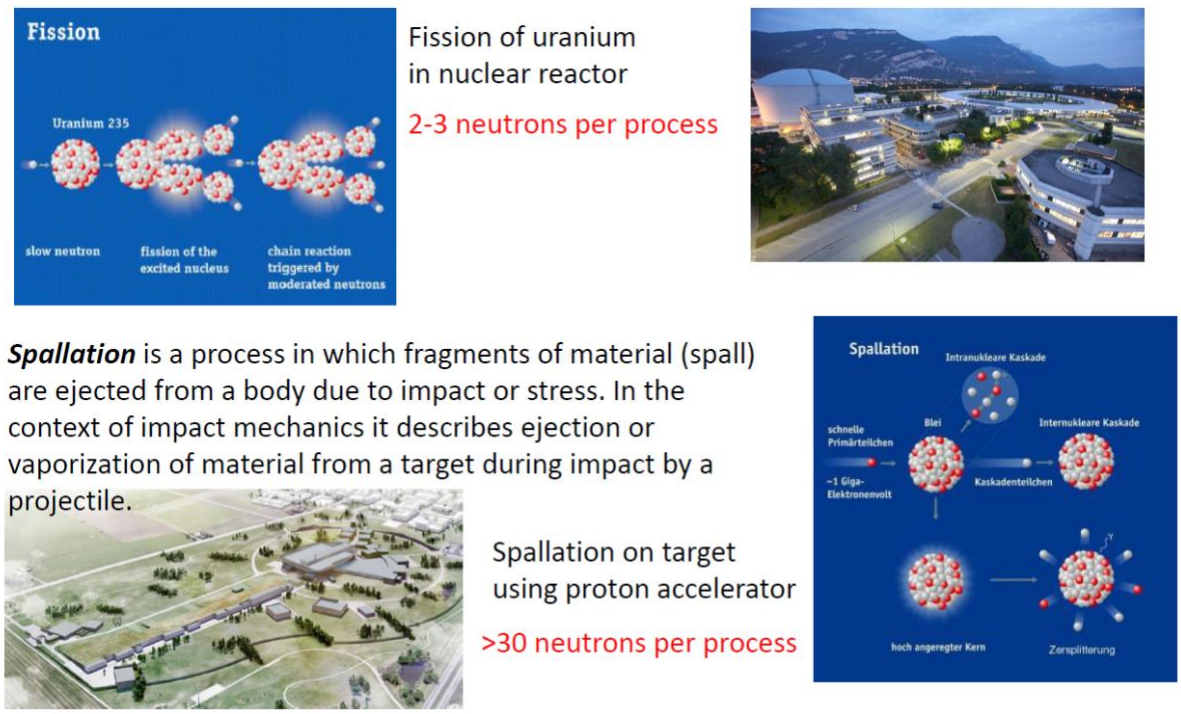

Figure 7.1: Production of neutrons: fission (ILL reactor), spallation (ESS).

The European Spallation Source will be the first spallation neutron facility to operate a low-dimensional moderator as part of its target systems. As a component of the moderator-reflector system, this roughly 3 x 70 cm aluminium alloy cylinder, consisting of separate channels containing water and liquid hydrogen, plays a key role in determining the scientific impact of the world-leading research instruments designed for ESS. The moderator is the central point of neutron extraction for all beamlines at ESS. Its basic geometry, material composition and operating methods must all be optimised to maximise the number of neutrons that can be used for scientific research at ESS.

The ESS MC simulation data demonstrated that a lower-dimensional moderator—that is, a low-profile, flattened moderator—would produce a uniformly high-intensity distribution of neutrons across the surface

of the device. While peak brightness was estimated at dimensions below 1.4 cm in height, it was decided in coordination with ESS instrument scientists that a height of 3 cm would give the highest brightness that could still be exploited by the greatest variety of instrument optics. The result was a newly engineered flat disc moderator for ESS, which became known as the "pancake" moderator, a design established in 2014. Later, the concept underwent further design optimisation by Target Division engineers and physicists, in close consultation with ESS instrument scientists, resulting in the 2015 baseline design. Due to the innovative shape of the para-hydrogen and water canisters in the interior of the flat moderator, it is now often referred to as the "butterfly" moderator. FZ-Jülich has undertaken the realisation of the ESS "butterfly" moderator as an in-kind contribution from German side. Fig. 7.2 and 7.3 presents the design of the ESS moderator and the realisation of a prototype LDM chamber[1].

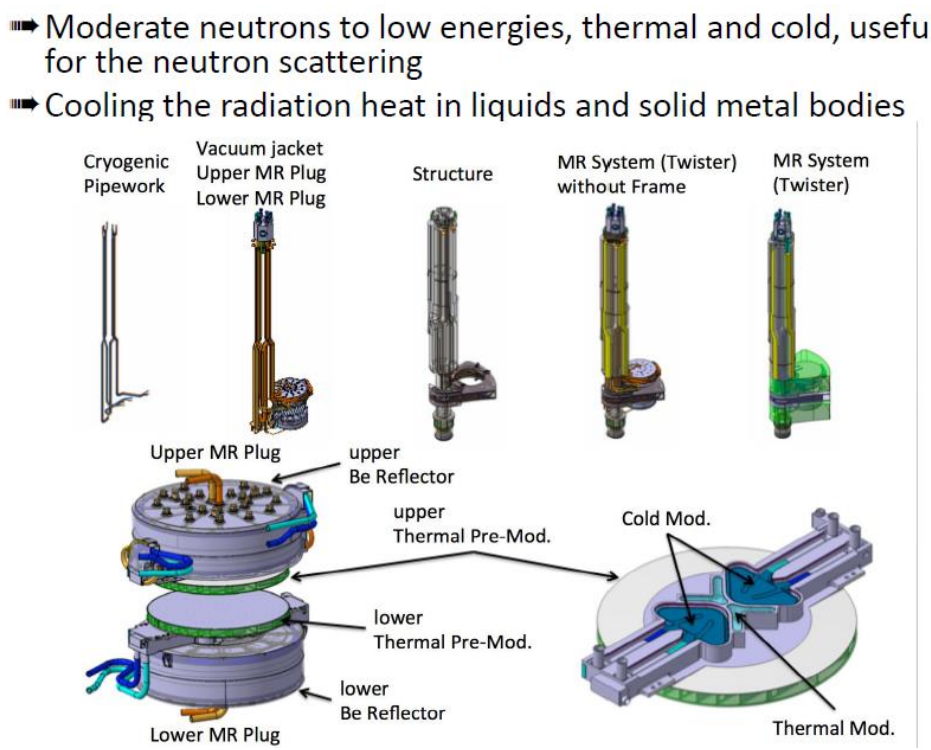

Figure 7.2: The ESS moderator assembly. The "butterfly" cold moderator is in the right lower corner.

[1] Roland Garoby, Update on Accelerator and Target, ESS Instruments Industry Day, Paris, June 8th 2018,

Figure 7.3: The engineering of the ESS LDM vessel is in an advanced stage at FZ-Jülich.

7.2 Cold neutron source at BNC

The Hungarian Wigner Research Centre for Physics (WRCP) at BNC (BNC-Wigner) as a partner of the BrightnESS project has carried out a series of experiments to develop new moderator geometries, and to develop a conceptual design of an advanced liquid hydrogen moderator based on the ESS concept. Thus, in order to support and validate the ESS moderator design the Budapest exercise within this project consists of the following major tasks:

- Perform experiments on the existing cold moderator to study ortho-para features of hydrogen
- Perform MC simulations for the local reactor environment to define an optimal moderator geometry
- Create the engineering design for an LDM at BRR
- Develop the fabrication technology for moderator vessel in the reactor case
- Verification of LDM chamber components and set up the scheme for the experimental testing of the LDM concept by providing the proper measuring equipment (Moderator Mapping Test Beamline device based on the ESPI technique invented by the BNC team).

The current deliverable report concerns the latter two items.

7.3 Cold moderator at the Budapest Research Reactor

BRR operates a liquid hydrogen cold neutron source, which was realised in the year 2000 as a highly cost-efficient solution for a medium flux reactor. It is expected to perform a modernization of the moderator and beam extraction system towards the end of this decade. The Neutron Spectroscopy Department (NSD) of the WRCP, together with the Energy Research Centre (both members of BNC consortium) in collaboration with spin-off companies have gained experience of cold moderator development and usage. MC simulations have shown that the LDM concept can improve the performance of BRR (measured in moderator brightness) by a factor of two in comparison to the current “volume” moderator. In the first part of the project the new LH cell geometries were studied for optimised geometry, minimising neutron leakage in a way of maximising the unperturbed flux field and the cold neutron yield in case of reactor sources, and the major engineering parameters of the LDM system were established. Also, a method, proposed by BNC/NSD, for moderator phase space mapping has been developed and this ESPI technique is to be applied for wavelength dependent divergence mapping of the moderator and the beam path.

7.4 Extended Monte Carlo simulations for the Budapest Research Reactor LDM

In order to verify various solutions for the application LDMs at neutron sources, e.g. for ESS, and in particular, for a substantial modernization of the BRR cold source, a compact moderator with para-hydrogen can be used without a complicated converter system – as established by our MC simulations and engineering design consideration performed in the previous part of the project (D4.4). To support the design of an LDM for realistic fabrication-ready documents, further numerical calculations were performed to support the engineering work of the specific LDM chamber to be fabricated. This was needed to optimize the neutron performance, calculate nuclear heat loads on the moderator chamber and thermo-hydraulic properties of the LDM cell.

A special expert report has been prepared by G. Patriskov (MCNP expert contracted for this task) This document summarizes the results of neutronics analysis of the low dimensional cold neutron source moderator cell in the 10th horizontal irradiation channel at Budapest Research Reactor and at the neutron beam of the 4th horizontal irradiation channel. The analysis is based on the idea of Mezei[2] et al., who have found that the brightness of the cold neutron source varies with the thickness of moderator cells. An optimal configuration could be figured out in order to reduce the volume of used liquid H_2 and maximise the cold neutron brightness.

This report has the following structure: section 7.3 presents the model of the analysis. In section 7.4 the optimization and the sensitivity analysis of the low dimension type cold neutron moderator cell in the 10th horizontal channel is presented. Section 7.5 gives recommendations for the optimal moderator cell size and the operation of cold neutron source having a thin moderator cell.

7.4.1 Assumption for the reactor model

The optimization was performed with code MCNP5[3] for the beginning of cycle N°32 BRR. The reactor model is based on the Final Safety Assessment Report (FSAR)[4] of the BRR and the drawings supplemented by the Reactor Department of the Energy Research Centre.

The reactor core of the model is based on the Report of BRR cycle N°32[5]. The corresponding reactor physics calculation is performed with KIKO3D version of BRR (so-called BREKI). The core position dependent nuclear fuel inventories for 8 axial nodes are set in the model accordingly for the isotopes U-235; U-238; Xe-135 and Sm-149. The parameter of the fresh fuel with which the BRR runs are presented in Table 7.1.

The whole calculation procedure is based on the ENDF-VII cross-section library. Additionally the following S(a,b) libraries are applied:

H in light water: lwtr.60t

D in heavy water: hwtr.60t

B-4 in Be-metal: be.60t

para H_2: hpara.61t

ortho H_2: hortho.61t

[2] F. Mezei, L. Zanini, A. Takibayev, K. Batkov, E. Klinkby, E. Pitcher, T. Schönfeldt, Low dimensional neutron moderators for enhanced source brightness, 2015; K. Batkov, A. Takibayev, L. Zanini, F. Mezei: Unperturbed moderator brightness in pulsed neutron sources. Nucl. Ins. and Meth. in Physics Research A 729 (2013) 500-505.

[3] MCNP5 User Guide Volume 1-2, 2003.

[4] Final Safety Assessment Report of Budapest Research Reactor III. Book. 2009.

[5] Report on Cycle N°32 of Budapest Research Reactor, 2013.

Table 7-1

	VVER-M2 LEU
enrichment of U-235	19,7 % ± 0,3 %
material of fuel	UO_2+Al
average mass of U-235	50,0 g ± 2,5 g
active length	600 mm^{+20mm}_{-30mm}
width of one layer in the fuel elements (including the cladding)	2,5 mm
cladding	reactor grade Al
width of cladding	0,75 mm
key-parameter of fuel element	35 mm
number of layer	3

The existing cold neutron source is detailed in the FSAR Chapter 11.7 of BRR. The moderator cell is modelled as a simple cylinder (see Figure 7.5). The cold neutron source made from reactor grade Al. Wall thickness of the moderator cell is 2.5 mm. To cool the moderator cell liquid-He is used. The helium cooling loop, the hydrogen make-up pipeline as well as the equipment of vacuum system are not presented in the MCNP model.

The moderator material is liquid H_2. According the FSAR Chapter 2.5.3.3 of BRR the moderator density was set to 0.07 g/cm^3. The pressure and the density of the moderator cell depends on the reactor power, and varies between 0.06-0.07 g/cm^3. Therefore, the hydrogen density is varied conservatively in the range 0.04-0.10 g/cm^3 in the MCNP calculation.

There are two forms of H_2 depending on their nuclear spin moments the para and ortho hydrogen molecules. At 0 K theoretically all H_2 molecules are in ground state (p-Hydrogen). At room temperature the ratio of the para and ortho Hydrogen tends to 1:3. The scattering cross section of the para and ortho Hydrogen depends on the orbital nuclear state function which are presented in Fig. 7.4[6].

[6] K. B. Grammer, R. Alarcon, L. Barro´n-Palos, D. Blyth, J. D. Bowman, J. Calarco, C. Crawford, K. Craycraft, D. Evans, N. Fomin, J. Fry, M. Gericke, R. C. Gillis, G. L. Greene, J. Hamblen, C. Hayes, S. Kucuker, R. Mahurin, M. Maldonado-Vel´azquez, E. Martin, M. McCrea, P. E. Mueller, M. Musgrave, H. Nann, S. I. Penttil, W. M. Snow, Z. Tang, W. S. Wilburn, New measurement of the scattering cross section of slow neutrons on liquid parahydrogen from neutron transmission, 2015.

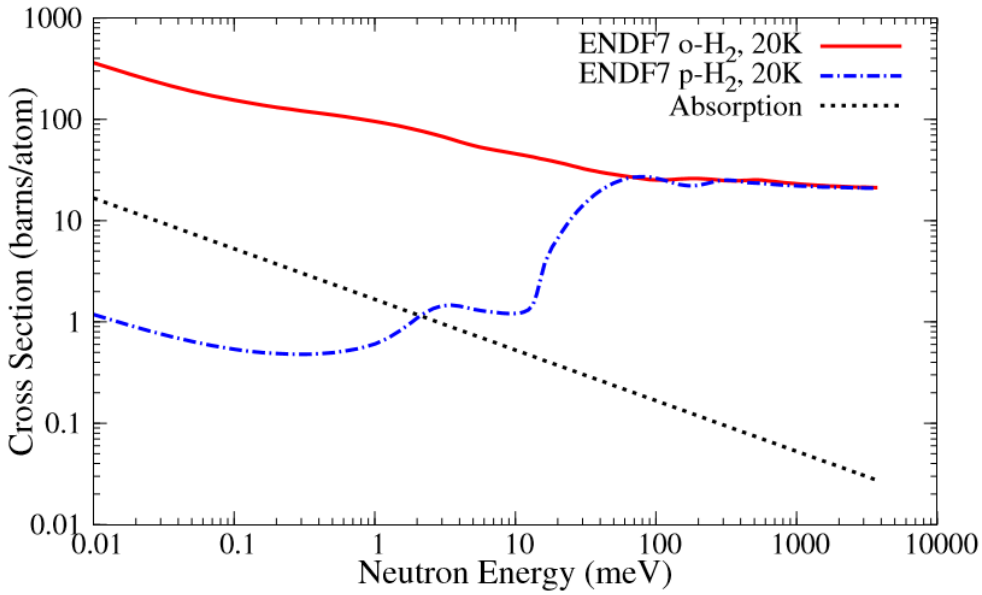

Figure 7.4 Scattering cross section of the para- and ortho-Hydrogen as a function of neutron energy

The new moderator cell is modelled also with a cylinder of which radius and length are varied in the intervals [1,0 mm - 2,5 mm] and [30 mm - 180 mm].

7.4.2 Problem-specific reactor model

The goal of the optimization is to maximize the neutron brightness which is defined below:

$$B = \frac{1}{\Omega A}\int_S \int_0^{\Omega}\int_0^{5\,meV} n(r,E,\underline{\Omega})drdEd\Omega$$

Where:

Ω: run from 0 to 5°, the reference direction is the outward axis of the cavity of the horizontal channels (see Figure 1).

S: outgoing surface of the moderator cell of which the integration is done.

By the optimisation the following assumptions are taken:

1. Fuel is homogenized fuel element-by-fuel element in 8 axial nodes.
2. The fissile material contains only the isotopes which are given in the KIKO3D I/O files (U-235, I-135, Xe-135, Pm-149, Sm-149, U-238, O-16 and Al-27 isotopes are set constant according Table 7-1).
3. Fix neutron source is applied according the nodes power.
4. All calculations and all neutron histories start with the same random number.
5. NONU card is used.
6. Decrease of the reactor model. The increment on the neutron brightness of the far fuel element positions can be neglected (see Table 7-2).
7. For normalization the following formula is used:

$$\phi = \frac{P}{\varepsilon} \nu \phi_{MCNP}$$

where

P: power of the fuel element which are taken into account;

ε: average fission energy of U-235 (200 MeV);

ν: average number of neutrons burned in fission (according to the criticality calculation this value is 2.44).

The results of different MCNP models for neutron brightness are presented in Table 7.2. KCODE calculation and reactor model with decreased number of fuel elements around the horizontal irradiation channel N°4 are compared. The model containing 88 fuel elements around the irradiation channel is in line with the result of the criticality calculation when the axial sampling of the source particle is made according to the nodes power.

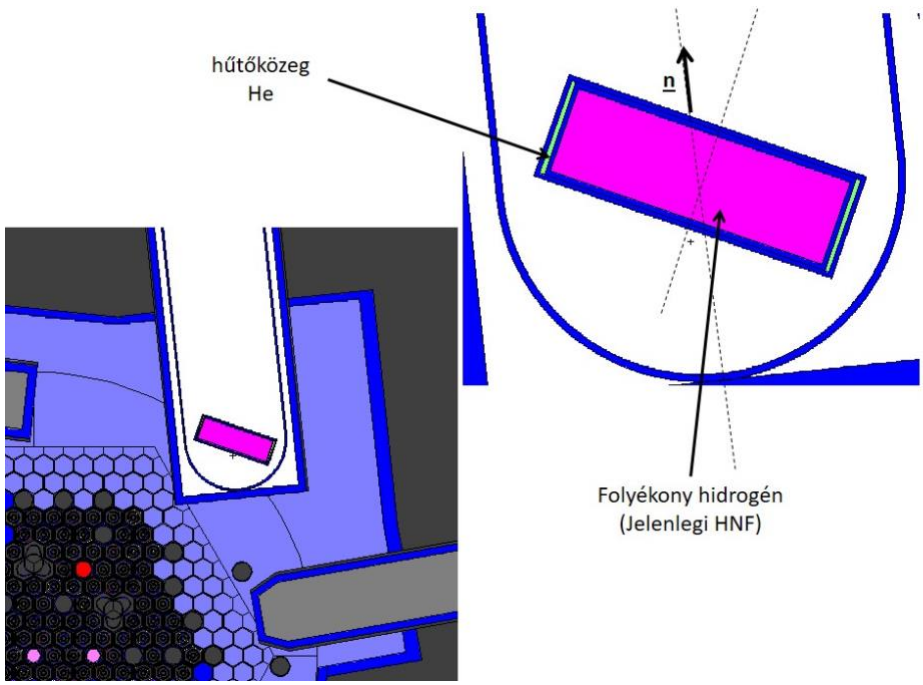

Figure 7.5: Horizontal cross-section of the BRR at the middle axial height (left), simplified CNS model (right)

Table 7-2

Number of fuel elements	mode	Brightness ($cm^{-2}s^{-1}st^{-1}$)
51	fix source (axial sampling uniform)	7,42E+12
88	fix source (axial sampling uniform)	8,22E+12
88	fix source (axial sampling according nodes power)	9,66E+12
189	criticality calculation	9,91E+12

7.4.3 Bare moderator cell

The neutron brightness of the existing CNS moderator cell is **3.73E+11 neutron/cm²/s/sr**.

First the optimisation has been performed for the bare moderator cell variants. The moderator material is pure p-hydrogen with 0.07 g/cm3 density. Table 7-3 presents the neutron brightness as a function of moderator cell length while the radius of the moderator cells is 15 mm. The length of the moderator cells was varied from 30 mm to 180 mm. Increasing the length of the moderator cell, the neutron brightness reaches its maximal value at moderator cell length of 90-165 mm. The reason of this wide range can be explained with the additional Be-reflector items settled around the CNS for reflecting the thermal and partly slowed-down neutrons into the reactor core as well as the cavity of CNS (see Fig. 7.4).

7.4.4 Usage of pre-moderator

Experimental and calculation studies have proven that the usage pre-moderator can effectively slow-down the epithermal neutrons in order to increase to neutron brightness for accelerator driven neutron source systems. To justify that the applicability of pre-moderator at BRR cold neutron source increases the brightness for the new type moderator cell calculations are made for different configuration.

Table 7-3

length	Neutron brightness (neutron/cm²/s/sr)	relative error
30 mm	4,71E+11	0,02
45 mm	6,03E+11	0,01
60 mm	6,91E+11	0,01
75 mm	7,64E+11	0,01
90 mm	8,18E+11	0,01
105 mm	8,50E+11	0,01
120 mm	8,53E+11	0,01
135 mm	8,55E+11	0,01
150 mm	8,55E+11	0,01
165 mm	8,45E+11	0,01
180 mm	8,19E+11	0,01

The brightness of the other three examined radius reaches its maximal value for the same moderator cell lengths (see Table 7-4).

Table 7-4

radius	10 mm	15 mm	20 mm	25 mm
length	Neutron brightness (neutron/cm^2/s/sr)			
90 mm	7.53E+11	7.43E+11	7.10E+11	6.80E+11
105 mm	7.69E+11	7.73E+11	7.39E+11	7.07E+11
120 mm	7.81E+11	7.76E+11	7.61E+11	7.20E+11
135 mm	7.84E+11	7.77E+11	7.59E+11	7.23E+11
150 mm	7.70E+11	7.77E+11	7.54E+11	7.15E+11
165 mm	7.54E+11	7.69E+11	7.37E+11	7.06E+11

The pre-moderator is taken into account in the MCNP model as an annulus around the moderator cell. The outer diameter of the pre-moderator is changed to the inner diameter of the cavity in the Be-baffle. The length of the pre-moderator and the moderator cell is the same. Some calculations were performed for moderator cell variant R15L120 having radius 15 mm and length 120 mm. The increment of the brightness in the most optimistic cases were 6-8% for moderator material light- and heavy water. The results are summarized in Table 7-5.

Table 7-5

variant	Neutron brightness (neutron/cm^2/s/sr)	Increment (%)
bare moderator cell – R15L120	7.76E+11	
light water pre-moderator, annulus with is 10 mm	8.26E+11	6.5
heavy water pre-moderator filled the whole cavity space in the length of the moderator cell	8.37E+11	7.9

7.4.5 Sensitivity analysis on the hydrogen properties

The sensitivity analysis on the hydrogen density and the ortho-para ratio for the existing configuration and the new low dimension moderator cell (variant R15L120) was performed. The main purpose of the sensitivity calculation is to compare the neutron physical behaviour of the low dimension and thick type bare moderator cell while the hydrogen properties are varied in those ranges which is conservatively supposed during the BRR operation.

7.4.6 Ortho-para hydrogen ratio

The equilibrium ratio of the o-p hydrogen depends on the temperature. Time scale of the ortho to para conversion is 1-3 days depends on the cooling loop configuration, the volume of the hydrogen and usage of o-p hydrogen catalyst. To plan the operation and maintenance of a new CNS system it is essential to know what the effect of o-p hydrogen ratio on neutron brightness is.

The examined p-o ratios are 95%-5% and 90%-10%. These values are assigned to the hot (50 K) and cold (20 K) states operational temperature of the existing CNS. Additionally, the ratio of room temperature (25%-75%) and the two theoretical cases (100%-0% and 0%-100%) are also analysed. The results for neutron brightness are summarized in Table 7-6.

Table 7-6

p-hydrogen ratio	operating CNS (neutron/cm^2/s/sr)	R15L120 variant (neutron/cm^2/s/sr)
100%	3.73E+11	7.72E+11
95%	3.99E+11	5.37E+11
90%	4.18E+11	4.21E+11
25%	3.99E+11	2.50E+11
0%	3.66E+11	2.31E+11

The operating CNS is not sensitive for the variation of o-p ratio of hydrogen due the thermalisation of process in a large volume. In case of the thin type moderator cell the neutrons have limited probability to be scattered within the moderator cell volume when the para-hydrogen ratio is 100%. Increasing the content of ortho-hydrogen – thanks to the higher neutron scattering cross-section of ortho-hydrogen – higher amount of the cold neutrons will be scattered out from the moderator cell.

The neutron brightness was examined for all radius for the length 90 mm and 165 mm when the p-o ratio is 90%-10% (equilibrium state at 50 K) for bare moderator cell. The neutron brightness decreases with 20% in contrast to that which is presented in section 3 for the bare moderator cell filled with 100% para-hydrogen.

Table 7-7

90%-10% p/o ration		
variant	neutron brightness (neutron/cm^2/s/sr)	relative error
R10L90	4.36E+11	0.02
R10L165	3.21E+11	0.02
R15L90	4.44E+11	0.02
R15L165	3.39E+11	0.02
R20L90	4,63E+11	0.01
R20L165	3,43E+11	0.01
R25L90	4,66E+11	0.01
R25L165	3,47E+11	0.01

7.4.7 Hydrogen density

According to [1] the hydrogen density was set to 0.07 g/cm3 during the optimization. With PERT card the density is varied in the range 0.04 g/cm3 – 0.1 g/cm3. As Table 7-8 and 7-9 show, both moderator cell types for all examined o/p ratios the neutron brightness increases with the hydrogen densities.

Table 7-8

	R15L120 variant			
p-hydrogen ratio	95%		100%	
density (g/cm^3)	neutron brightness (neutron/cm^2/s/sr)	relative error	neutron brightness (neutron/cm^2/s/sr)	relative error
0.04	5.00E+11	0.01	6.34E+11	0.01
0.05	5.18E+11	0.01	6.94E+11	0.01
0.06	5.33E+11	0.01	7.42E+11	0.01
0.07	5.41E+11	0.01	7.80E+11	0.01
0.08	5.45E+11	0.01	8.06E+11	0.01
0.09	5.45E+11	0.01	8.13E+11	0.01
0.10	5.37E+11	0.01	8.17E+11	0.01

Table 7-9

	operating moderator cell			
p-hydrogen ratio	95%		100%	
density (g/cm^3)	neutron brightness (neutron/cm^2/s/sr)	relative error	neutron brightness (neutron/cm^2/s/sr)	relative error
0.04	3.17E+11	0.01	2.98E+11	0.01
0.05	3.51E+11	0.01	3.28E+11	0.01
0.06	3.80E+11	0.01	3.54E+11	0.01
0.07	4.03E+11	0.01	3.77E+11	0.01
0.08	4.21E+11	0.01	3.92E+11	0.01
0.09	4.36E+11	0.01	4.07E+11	0.01
0.10	4.44E+11	0.01	4.14E+11	0.01

7.4.8 Summary of MCNP modelling

The scope of the report is the feasibility analysis of the neutronics behaviour of a new, low dimension type moderator cell at Budapest Research Reactor. To perform it a MCNP model of the reactor was developed based on technical drawings and report on the cycles. Calculations are made for 50-100 variants depending on parameter of the bare moderator settled in the dedicated horizontal irradiation channel N°10. The experiences of the study are the followings:

1. The optimization shows that the low dimension type bare moderator cell has two times higher neutron brightness than the existing thick moderator cell. The parameter of the low dimension type bare moderator cell is varied in the following ranges:
    a. radius: 10-25 mm;
    b. length: 90-165 mm.
2. The applicability of pre-moderator could increase the neutron brightness for low dimension moderator cell with 6-8 %. Light- and heavy water are chosen for pre-moderator material. The increment occurs when a thin layer of light water and the full horizontal channel of heavy water is supposed.
3. The low dimension type bare moderator cell is very sensitive of the content of hydrogen if the para-hydrogen ratio decreases below 90% (equilibrium para hydrogen content at 50 K) in the low dimension type bare moderator cell the neutron brightness decreases to the same level which is expected for the existing tick moderator cell. The high level of p-hydrogen in the low dimension type moderator cell must be maintained for the all period of the reactor cycle using the new type cold moderator device.

7.5 Model experiments for engineering and fabrication of LDM chamber

In order to prepare the challenging technology task of the fabrication of a new moderator cell with complex geometry and high-precision cutting and welding procedures using non-standard raw materials with difficulty to cope with the cryogenic and radiation safety requirements we have elaborated a new pilot procedure,

namely to perform 3D printing of the moderator chamber components in a plastic form in order to understand a real size objects the problem of machining and assembling. As a first step we have created a 3D engineering document (in Solid Works) starting from the detailed engineering drawings of the moderator chamber currently used in the BRR cold source (Fig. 7.5). Using this 3D document, we can visualize the various aspects of the moderator vessel presented in Fig. 7.6.

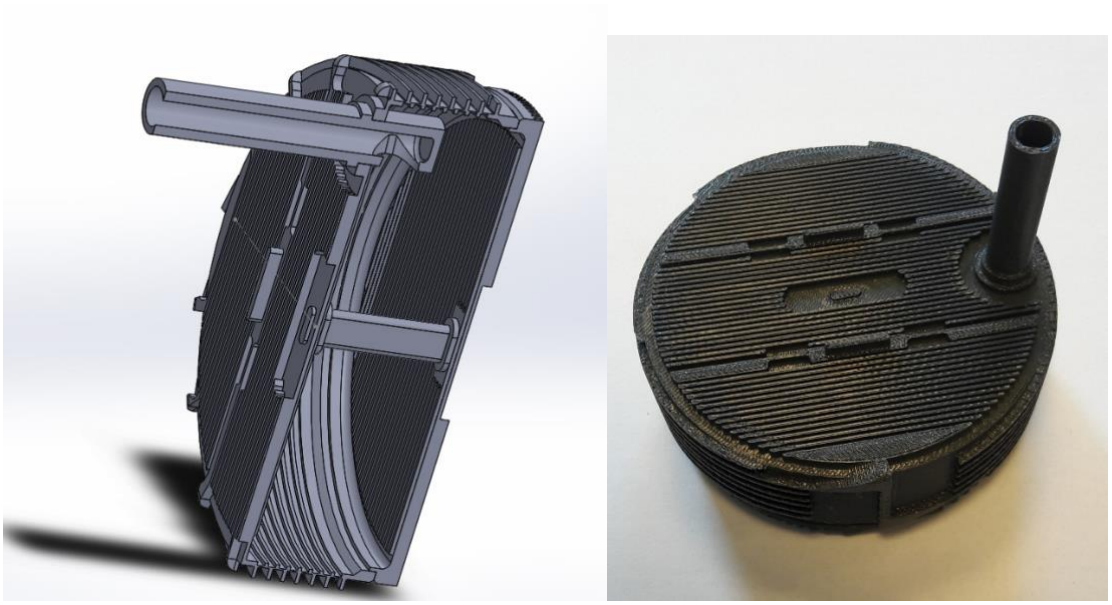

Figure 7.6: 3D design reconstruction of the moderator vessel and its 3D printed version.

7.6 Development of engineering technologies for the LDM chamber at BRR

7.6.1 Technological approach

The systematic approach in the experimental verification of the compact moderator concept at an existing/operating cryogenic hydrogen moderator - for the case of a reactor neutron source – has shown a number of features which are to be considered as important factors influencing the design, fabrication and operation of the ESS compact moderator construction being implemented. At the cold neutron facility of the BRR a series of measurements has been performed to understand the ortho-para conversion features of hydrogen at nuclear heating conditions near to the reactor core. Very promising experimental results have been obtained, which will certainly greatly contribute to model the ESS moderator features as well as to elaborate a simplified scheme of a new CNS system for a reactor case. In particular, we assume, that a pre-cooling of hydrogen before the reactor power ramp-up the optimal para-hydrogen state can be preserved during the reactor operation. Thus, for a substantial modernization of the BRR cold source a compact moderator with para-hydrogen can be used without a complicated converter system. In the case of ESS, because of the very high power of the target, this option cannot be considered for a safe operation, the comparison of the two situations might, however, serve for interesting scientific-technical conclusions.

Development of the manufacturing technology for a moderator cell is studied and tests are performed. The complexity of the geometry with tight tolerances requires a development and optimization of the manufacturing processes, therefore manufacturing of a prototype of the moderator cell might be performed for various test exemplars. To fulfil requirements of the H tight vessel, cast state materials cannot be employed due to the defects in the cast structure; therefore, the starting material is a sheet metal. The starting material of the cell head manufacturing is an AlMg4.5 sheet, with a thickness of 5 mm. For supporting

the Al shell during some operation, a plastic (PUR) material will be used. The required shape cannot be manufactured by solely forming, therefore the proposed manufacturing technology is metal forming combined with machining.

The considered forming technology can be either deep drawing or spin forming. In terms of shape giving, deep drawing is advantageous for vertical walls with flat cup bottoms, where spinning is better for spherical or conical shapes. A parameter study was carried out to find blank and die geometric parameters for the cell head deep drawing, results can be found in the Annex. In terms of tooling costs, deep drawing requires an expensive die set compared to the spinning mandrel, therefore, for small quantities spin forming is more economical. Nevertheless, thick and relatively high strength sheets are difficult to process with spin forming; CNC spinning is required with symmetric arrangements of the rollers. After forming, high residual stresses are stored in the material; therefore an annealing heat treatment is necessary. An inspection of the geometry of the preform is required, which can be measured by a 3D coordinate measurement machine. Machining is 3D milling, it is possible to perform the operation on a 3 axis CNC milling machine, favourable is a 5 axes machine. A clamping device has to be created to fix the formed cup on the milling machine. As both the outer concave and internal convex surfaces of the shell have to be machined, flipping of the work piece is necessary, furthermore a support device has to be constructed to support the shell. To assure the surface roughness requirements, finishing operation, grinding is performed. After completing the shape, dimensional measurement with a 3D coordinate measurement machine is performed. In this report, the development of the technology is described: the definition of the geometry of the preform for spinning; the shape measurements of the cup; heat treatment parameters; the tool path strategies for 3D milling; and some initial calculations of the forming can be found in the Annex.

7.6.2 Manufacturing steps

The prototype process steps are as follows:

1. Semi-hard blanks or annealed blanks are cut.
2. Approximate shape of the cell head shell (preform) is formed by metal spinning on a CNC machine.
3. Preform is annealed (350°C for 1h).
4. Shape inspection: 3D coordinate measurements.
5. Preform is attached to a supporting and positioning ring by an adhesive.
6. The ring is clamped to the milling machine's bed; outer surface is machined to size.
7. Preform is transferred to the outer supporting holder and internal surface is machined.
8. Surface finishing.
9. Shape inspection: 3D coordinate measurements.

7.6.3 Definition and processing of preform

The preform has to incorporate the final shape of the work piece as well as the machining allowance with tolerances that the forming technology is capable to provide, furthermore some excess height for the clamping. As machining will start on the unsupported outer surface, and subsequently progresses on the supported internal surface, larger allowance is defined for the internal one. The machining allowance on the outer surface was 1.5 mm, on the internal surface the maximal allowance was 1.9 mm at the perimeter. The internal diameter is a gauged diameter and the outer diameter is a reference dimension, the tolerances in the preform were defined accordingly. The tolerance range on the mandrel (internal) side was 0.1 mm, and on the roller side was 0.5 mm. The height of the cup is about 10 mm larger than the final shape. A flat region

at the axis of the cup was defined with an outer diameter of 25 mm which is necessary for the holder on the spinning machine.

The initial 5 mm thick AlMg4.5 (H111, semi-hard) sheet was cut to 500 mm x 500 mm squares (16 pieces) and delivered to spin forming shop, where the circular blanks were cut to a diameter of 380 mm with rotary knives. The thickness and strength of the material was on the upper limit for this cutting, the cut edges had to be trimmed for improvement. The mandrel for the spin forming was made from C45 steel by turning and heat treatment. The spin forming machine is a CNC hydraulic machine with a single sided roller. In the initial spin forming tests, formability and dimensional accuracy were tested. Three stages were defined for the spinning, in the first a small diameter holder was used and the large radius of bottom of the cup was formed with conventional spinning, then a large holder was used and the rest of the bottom was formed, and finally the vertical wall of the cup was formed with shear spinning. Formability of the semi-hard sheet seems sufficient for the spinning of the preform, but the yield of the technology is limiting. Out of 10 semi-hard blanks, only one successful preform could be made. Difficulties were due to radial cracks progressing from the perimeter towards the axis of the cup. A reason for it could have been the rough edges due to the shear cutting of the blank, but the post-processing with trimming and finishing the edge could not solve entirely this problem. A cut of the blanks with water jet is to be recommended for the next runs. Another difficulty was a horizontal crack appearing while initiating the shear spinning for forming due a local large deformation is made to the material, once a horizontal crack appear spinning has to be stopped, otherwise crack propagates along the diameter and cleaves the cup into two pieces. During the spinning, keeping the position of the blank with a roller driven on a single side is difficult with a thick and relatively high strength Al alloy sheet material. The remaining 6 blanks were annealed at 350°C for 1h, and the next forming tests were carried out. Out of the 6 annealed blanks, one was successful, for the rest, similar problems were found as with the semi-hard blanks, mainly with horizontal cracking. Four more cups were made with smaller preform heights, where the cup was cut at location of the horizontal crack. The shape is tested in the spinning shop with a shape gauge and the wall diameter is measured with a caliper.

7.6.4 Heat treatment

Thermal behaviour of the AlMg4.5 material was tested by an annealing experiment of specimens taken out of a formed cup, as well as from the base material. The cup forming was an initial forming test carried out by spin forming, the material was deformed until fracture occurred. Subsequently, specimens were cut out from the vicinity of the fracture. Two annealing test temperatures were defined as 200 °C and 310 °C. The time span of the annealing was determined as max. 90 minutes. Annealing was carried out in a laboratory furnace. At 200 °C, 3 specimens were loaded in the furnace, and at every 30 min a specimen was taken out, and hardness was measured in at least 3 points. At 310 °C, 3 specimens were loaded in the furnace, and at every 20 min a specimen was taken out, and hardness was measured in at least 3 points. Hardness measurements were carried out by a Zwick hardness tester with a Vickers head, the loading was 2.2 kg. Hardness was also measured on the blank in the as-receives state (semi-hard, H111), it was measured to be about 95 HV. In the formed state, hardness was measured as about 110 HV. Annealing at 200°C, hardness drops to 90 HV after 90 min. Annealing at 310°C, hardness drops to about 85 HV after 40 min. Annealing of the spin formed cups are to be carried out in large industrial furnaces, therefore temperature for the annealing is determined as 350 °C for 60 min.

7.6.5 Tool paths for milling

For the final shape of the cell, two programs have to be defined: one for the outer and one for the internal surface. As the internal surface is machined in a holder, the inverse surface of the outer surface has to be machined into the holder; this is the third program to be defined. All tool path programs were modelled in CATIA and output CAM files were generated to the NCT milling machine format.

7.6.6 Machining

The machining sequence of the first work piece together with the positioning ring, and the holder were prepared. During the machining of the 3 cups, some optimizations were made to the machining programs. The lead time for finishing one work piece was about 30 hours.

7.6.7 Machined cell head dimensions

Coordinate measurements were carried out on a Mitutoyo B303 machine. Coordinate measurements were used to record the internal and outer profile of the cell, to verify the height and thicknesses at the defined gauge points. The base plane of measurement of the cell was base A in the drawing in Fig. 1.1. The profiles were measured by locking a coordinate on the machine, hence measuring in plane. The z axis was the axis of the cell. The y direction was equivalent to the 45-225 degree direction on the drawing; the x axis was equivalent to the 315-135 direction on the drawing. Uncorrected measurement data contains the centre coordinates of the measurement ball. To determine the contact coordinates, geometrical corrections were applied. Height and thickness values were calculated. The thickness of the bottom was measured. Measured points were entered to AutoCAD, and then the offset was made by the radius of the measurement ball. Finally, the profiles were copied to the cross section of the cell head by a distance of the bottom thickness.

7.6.8 Conclusions and recommendations on machining

Development of the manufacturing technology for a moderator cell upper head was described in this report. The definition of the preform, spin forming, heat treatments and measurements were carried out. Then the preform was machined to the final shape both on the internal and outer surfaces on a milling machine by using positioning devices. The main conclusions and recommendations are as follows:

- Forming: spin forming accuracy: the thickness reduction of the wall of the cup due to shear spinning also reduces the allowance for machining. Either the conventional spinning should be performed for the wall, or if it is not possible, then the tight tolerances for both inner and outer diameters should be kept.

- Yield: cold forming in one step is possible but the yield of the technology is limiting. The yield of the process was very low without heat treatments. Wobbling of the blank on the mandrel should be avoided, the support of the blank should be improved, possibly by shape fit, e.g. by using a pin for positioning and radial support, for this method a hole is needed in the centre of the blank.

- Machining:
accuracy: the dimensions within the tolerances can be kept in most of the gauge points. Surface finishing on side with protrusions for the tube connection is difficult.
cycle time: to achieve a fine machined surface, small feed is defined, therefore the machining time is long. For the small required quantity, the production type is unique production. The shape of the preform is slightly different from piece to piece, therefore, positioning and offset definitions have to be made. It requires a skilled operator and an accurate initial measurement of the shape of the preform, and it contributes to the long cycle time. Productivity can be improved by allocating more machines in the production.

7.7 Definition of materials specification for cold neutron moderators

The scope of this task is the definition of materials for in-pile part of a CNS, in particular for the LDM chamber in accordance with acceptance criteria for the BRR. The choice of material should define some alloys (no less than two) acceptable for manufacturing of each construction element. For each material, an alloy should be defined according to international standards as well as material codification according to Standards of the country of manufacturer.

The main acceptance criteria for choice of material:

- Application at operation conditions according to EN Standard.
- Neutrons capture cross section of material.
- Level of activation.
- Strength properties at operation conditions.
- Strength properties after neutron irradiation
- Manufacturability.

Moderator Chamber elements to be considered:
- Moderator Cell;
- Connecting Pipes.

Moderator chamber materials

The LDM chamber material should:

- Possess minimal cold neutrons capture cross-section;
- Be resistant at operational temperatures;
- Possess brittle failure resistance at cryogenic temperatures;
- Have good properties for welding and deforming at manufacturing;
- Possess neutron radiation resistance;
- Meet lifetime of at least 15 years.

A report on the study of materials specification is presented as Annex-1 to this D4.15 Report.

7.8 Engineering design versions for the vessel geometry and machining approach

Having performed the neutronics performance optimisation of a moderator chamber for the reactor case, the next step was the design of engineering drawings for the LDM chamber as shown in Fig. 7.7 and Fig. 7.8 In order to study the machining, welding and assembling possibilities first the version1 (assembled from two half cylinders with pipeline connection on the bottoms) and version2 (120 mm cylinder with cooling He-gas circulation channels, covered by two embossed/convex edges) chamber configurations were performed.

Development of the manufacturing technology for a moderator cell is studied and test are performed as presented in section 7.6. The complexity of the geometry with tight tolerances requires a development and optimization of the manufacturing processes, therefore manufacturing of a prototype of the moderator cell might be performed for various test exemplars. To fulfil requirements of the H tight vessel, cast state materials cannot be employed due to the defects in the cast structure; therefore, the starting material is a sheet metal. The starting material of the cell head manufacturing is an AlMg4.5 sheet, with a thickness of 5 mm. For supporting the Al shell during some operation, a plastic (PUR) material will be used. The required shape cannot be manufactured by solely forming therefore the proposed manufacturing technology is metal forming combined with machining.

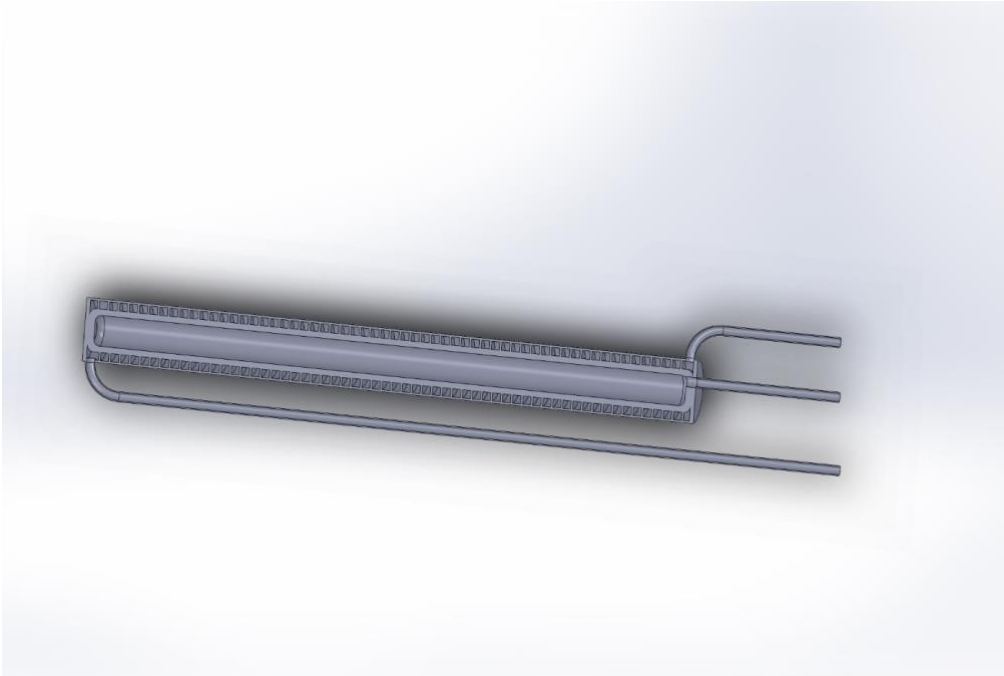

Figure 7.7a: Conceptual design and engineering version1 of the moderator vessel.

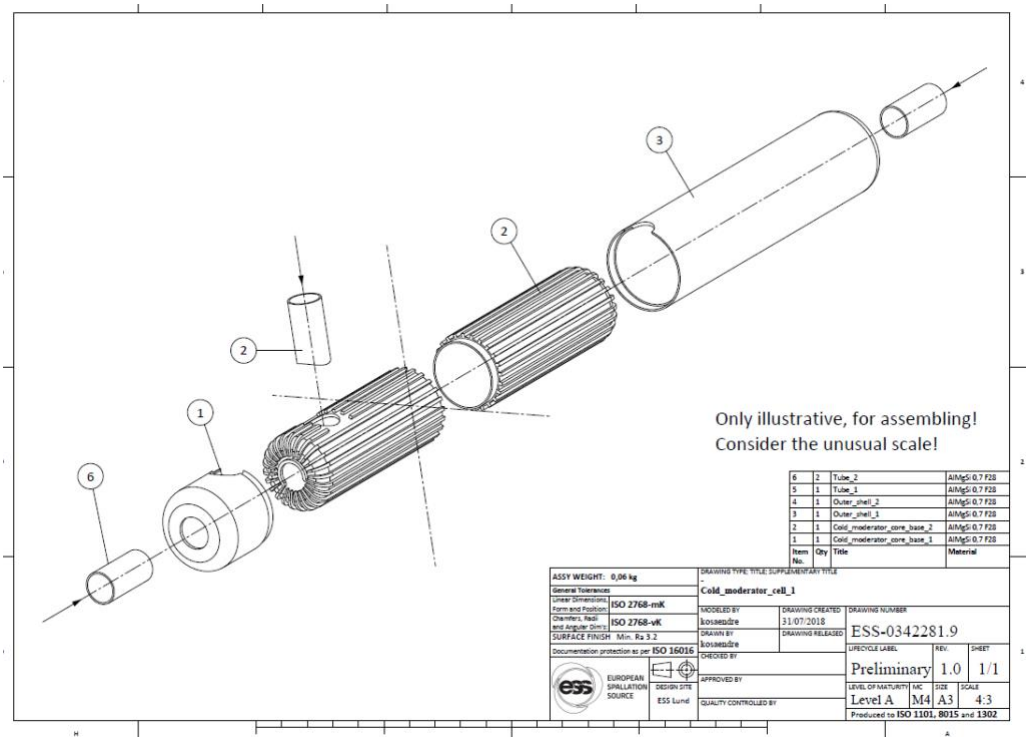

Figure 7.8b: Conceptual design and engineering version1 of the moderator vessel.

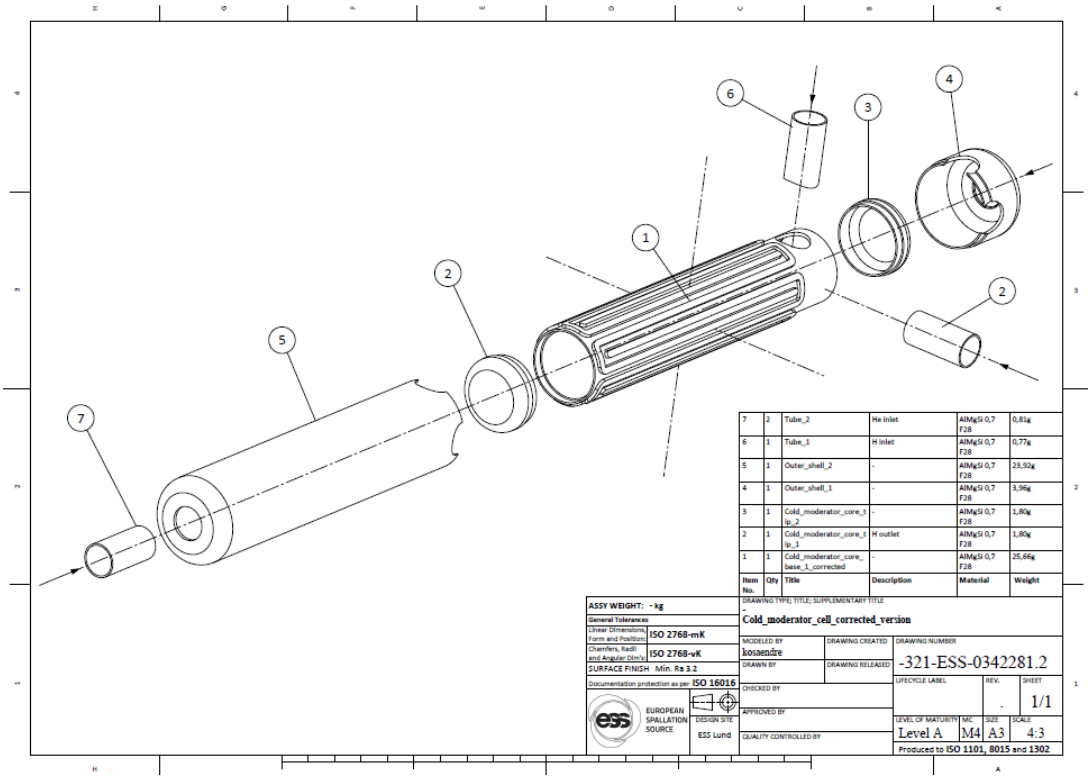

Figure 7.9a: Engineering version2 of the moderator vessel.

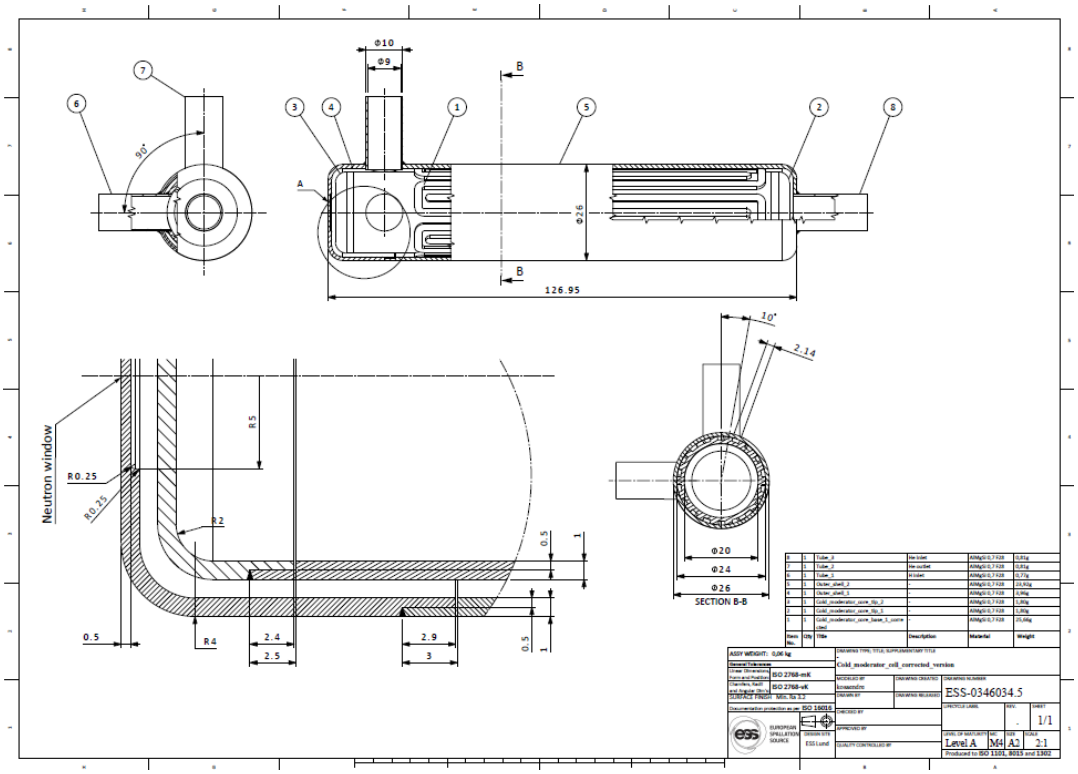

Figure 7.10b: Detailed engineering version2 of the moderator vessel.

Figure 7.11: Components fabricated for the moderator vessel.

In Fig. 7.9 the moderator vessel components fabricated for the verification tasks are shown. Fig. 7.10 presents the laser scanning optical observation of the dimensional control.

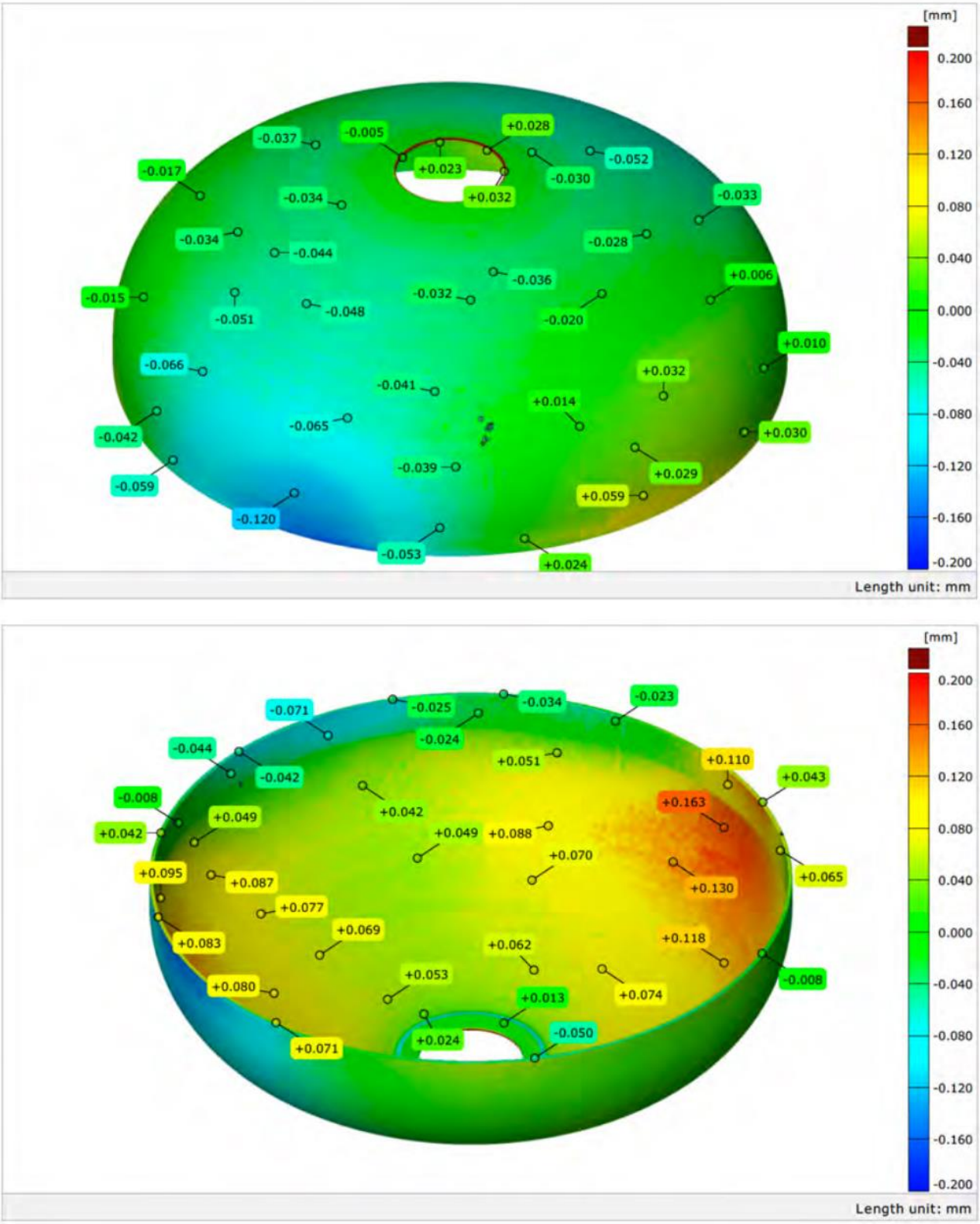

Figure 7.12: Fabricated moderator vessel components are controlled by laser scanning optical observation.

7.9 Final testing of the LDM concept by ESPI technique

The final testing of the LDM concept is foreseen to be carried out by measurements of the moderator chamber brightness under real neutron irradiation conditions. For this purpose, the ESPI technique will be applied as described earlier in D4.7. A complete set-up of the test-beamline – as to be installed at ESS as the first operational instrument - is presented in Fig. 7.11.

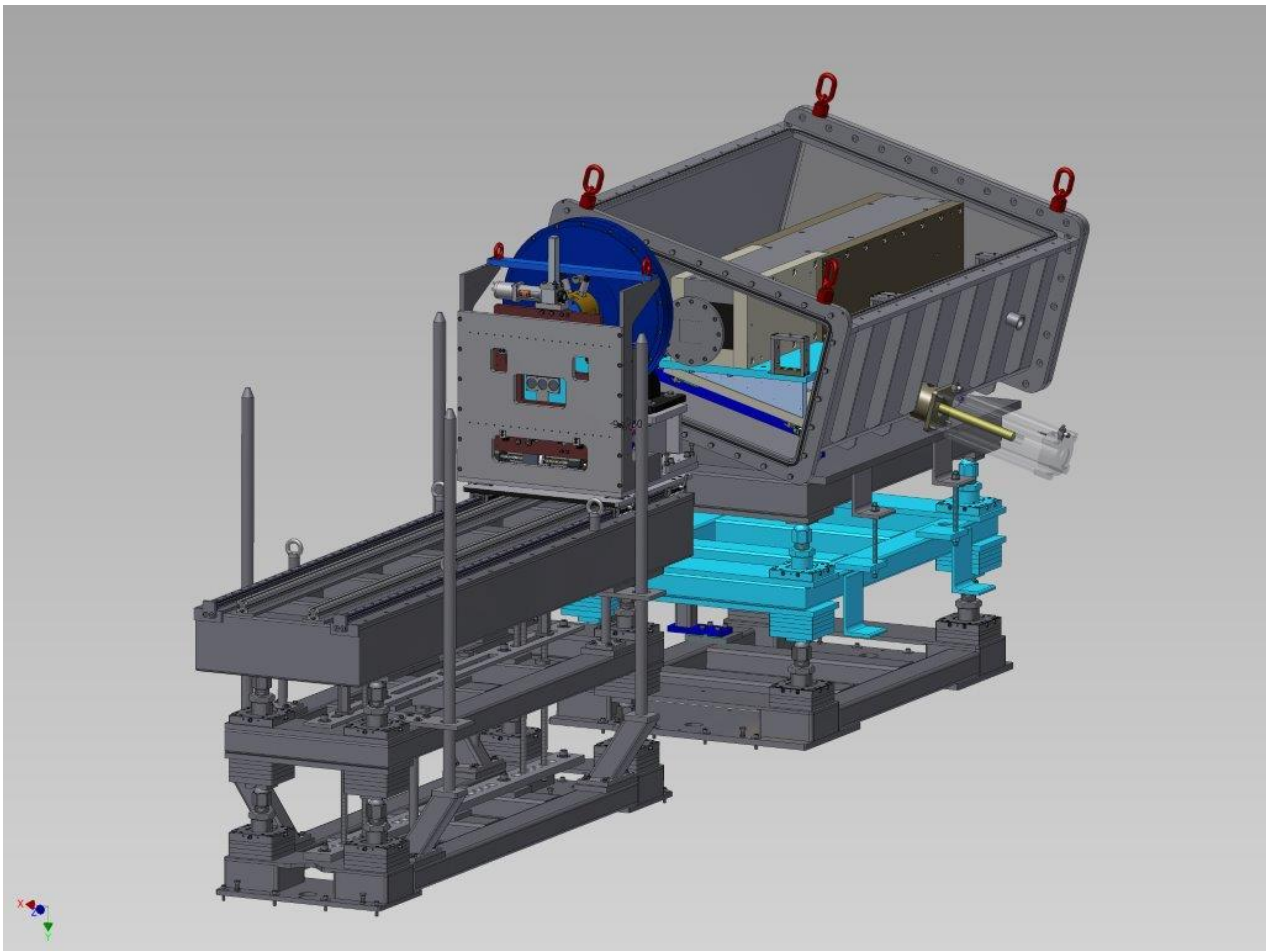

Figure 7.13: Conceptual design of the ESS test-beamline.

The same system will be set up and tested on a neutron beamline at the BRR - except the heavy shutter, which has been designed especially for the harsh radiation environment at ESS. (The proper biological shielding has to be installed as well.)

The ESPI system engineering version is presented in Fig. 7.12 showing the major components. Fig. 7.13 are showing two major components in the testing phase.

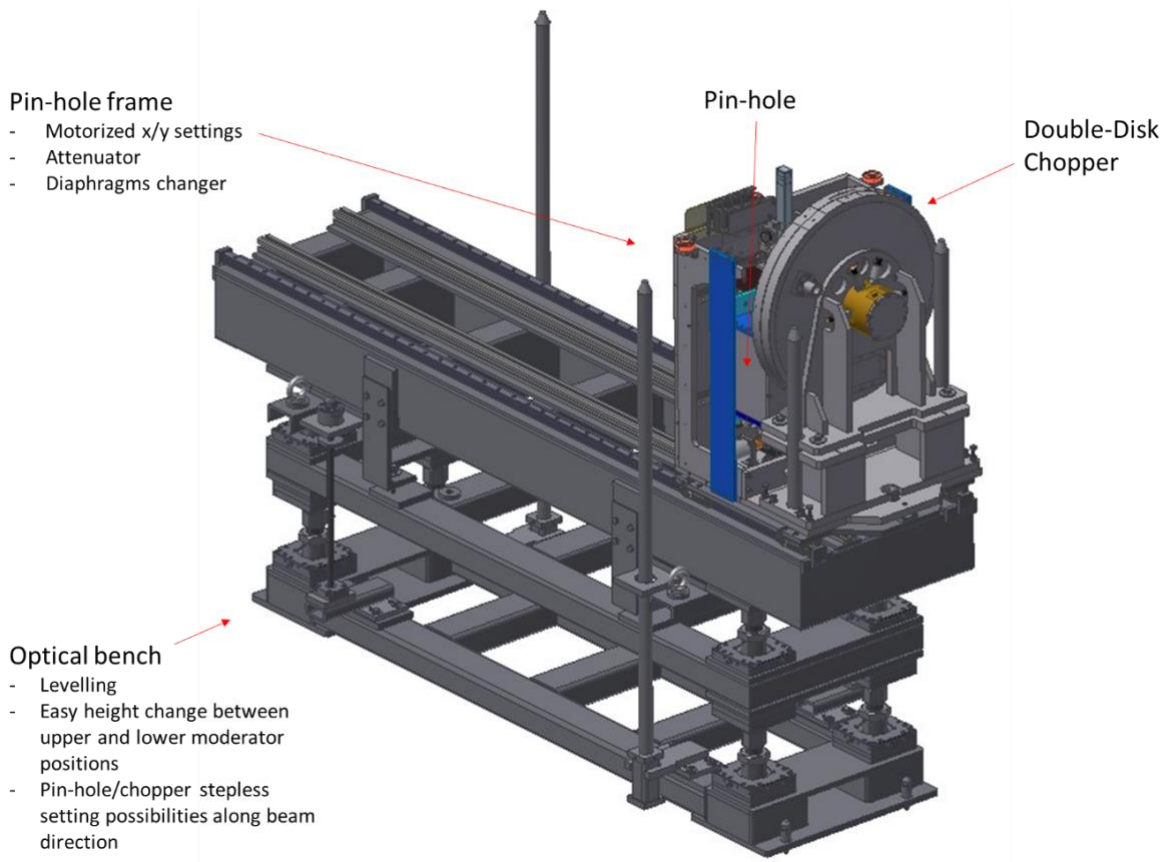

Figure 7.14: Engineering design of the ESPI system.

Figure: 7.15: Solid boron-converter detector (left) and chopper prototype under testing the BRR neutron beamline (right)

8 IPR considerations

As stated in the previous delivery reports, it has been considered that the novel concept of the LDM has been published by the ESS Neutronics team, thus it belongs to the public domain, such as the design and operation experience of the BRR cold moderator system. In the current phase of the project innovative technological realisations in the fabrication of the prototype moderator chamber were made, the 3D printing reverse engineering solution and its application for similar complicated structures might be envisaged for IPR protection having performed more verification of the applied procedure.

9 Conclusion

The current BRR cold neutron source serves in BrightnESS as an experimental benchmark facility for testing new features of the LDM concept developed at ESS. In the previous part of the project (D4.4 report) the systematic approach in the experimental verification of the compact moderator concept at an existing/operating cryogenic hydrogen moderator, for the case of a reactor neutron source, has shown a number of features which are considered as important factors influencing the design, fabrication and operation of the ESS compact moderator construction being implemented. The choice of materials, testing of cryogenic properties of components used in harsh irradiation environment, quality management during fabrication are relevant questions to be answered for the ESS case as well, thus the proper procedures described in this report are most relevant to be considered for the ESS LDM system. Further investigation of the ortho-para conversion features has also high interest. During the moderator tests at BNC it has been also understood that the monitoring of the homogeneity of the moderator as well as the beam take-off system has crucial importance, thus the Moderator Mapping Test Beamline device based on the ESPI concept.

The LDM tasks in the current phase of the projects were focused on the detailed MC simulations of the neutronics performance of the chamber according to the technical specification elaborated in the previous part. The engineering design of an LDM chamber as a tube-type moderator chamber surrounded by reflecting material has been performed for optimized ortho-para hydrogen media. The MC calculations were now performed to define the exact engineering solutions for the moderator vessel to be provided experimentally. For the BRR case several solutions of a 125 mm long and 25 mm diameter tube type moderator vessel were considered taking into account of engineering, machining, welding, assembling realities. AlMg3/AlMg5 alloys were considered as material, having carefully studied the specification of materials required for the cryogenic requirements under conditions of complex irradiation environment. Prior to the fabrication of moderator chamber components, a reverse engineering exercise was performed by creating a numerical model document for the currently used moderator vessel at BRR, which was then used to produce a 3D printed plastic replica of the chamber. This was extremely helpful to understand and elaborate the functionality in the engineering design of the LDM cell. The moderator chamber fabrication steps and procedure were systematically analysed considering the tooling to be applied. The dimensional control of the fabrication quality was demonstrated, e.g. by presenting the laser scanning observation of the surface and thickness tolerances. He-tightness measurements make a crucial part of the manufacturing/welding quality.

The final verification of the LDM concept is foreseen to be carried out by measurements of the moderator chamber brightness under real neutron irradiation conditions. Thus, special care was devoted to the design and construction of a test-beamline facility, which is also part of this WP. This device has been manufactured and assembled at BNC-Wigner within the frame of this project. The ESPI technique invented by the BNC team was demonstrated, the specific components designed for the ESS case were tested at BRR and at the Kjeller Norwegian reactor - as described earlier in D4.7. As a post project activity, the complete set-up of the test-beamline will be first tested at BNC, then it will be transported and installed at ESS as the first operated

instrument there in order to serve with information on the source features for the construction of the ESS instruments.

10 List of Publications

- Füzi J, Heirich V, László Z, Len A, Orbán J, Rosta L, Janik J: Compact equipment for neutron source imaging; VII UCANS conference, San Carlos de Bariloche, Argentina, 2018
- Piscitelli, F., Messi, F., Anastasopoulos, M., Bryś, T., Chicken, F., Dian, E., Fuzi, J., Höglund, C., Kiss, G., Orban, J., Pazmandi, P., Robinson, L., Rosta, L., Schmidt, S., Varga, D., Zsiros, T., Hall-Wilton, R. The Multi-Blade Boron-10-based neutron detector for high intensity neutron reflectometry at ESS. Journal of Instrumentation 12(3), P03013, (2017).
- László Rosta: Introduction to neutron beam experiments, Research Instruments at the Budapest Neutron Centre, Eds.: Füzi J, Len A, Bajnok K, Budapest 2017, ISBN 978-963-12-8757-8, pp 11-23 (2017)
- T. Veres, Sz. Sajti, L. Cser, Sz. Bálint and L. Bottyán Roughness replication in neutron supermirrors J. Appl. Cryst. (2017). 50, 184–191
- Rosta L, Rogante M: Neutrons for materials research, Proc. 7th Int. Conf. "Mechanical Technologies and Structural Materials" MTSM 2017, Split, Croatia, 21-22 Sept. 2017, S. Jozić, B. Lela, Eds., Croatian Society for Mechanical Technologies, Split, Croatia (2017), ISSN 1847-7917, pp. 123-131
- Orbán J, Füzi J, Rosta L, Kiss G: Development of area detectors for neutron beam instrumentation at the Budapest Neutron Centre, IAEA, 2018, 17 old.

D4.15.ANNEX-1: Preliminary material definition and specification for CNS moderator chambers

Prepared by HNF-Technologies LTD, Budapest

September, 2017

TABLE OF CONTENTS

1. PURPOSE AND SCOPE

The scope of the work is the definition of materials for in-pile part of Cold Neutron Source (CNS) in accordance with acceptance criteria.

The choice of material should define some alloys (no less than two) acceptable for manufacturing of each construction element.

For each material, an alloy should be defined according to EN Standard as well as material codification according to Standards of the country of manufacturer.

The main acceptance criteria for choice of material:

- Application at operation conditions according to EN Standard.
- Neutrons capture cross section of material.
- Level of activation.
- Strength properties at operation conditions.
- Strength properties after neutron irradiation
- Manufacturability.

2. MODERATOR CHAMBER

2.1 Moderator Chamber

Moderator Chamber elements:

- Moderator Cell;
- Connecting Pipes.

2.2 Moderator Chamber material

Moderator Chamber material should:

- possess minimal cold neutrons capture cross-section;
- be resistant at operational temperatures;
- possess brittle failure resistance at cryogenic temperatures;
- have good properties for welding and deforming at manufacturing;
- possess neutron radiation resistance;
- meet lifetime of at least 15 years.

2.3 Design Parameters

Table 1. Moderator Chamber design parameters

№	Parameter	Value
1.	Medium	Vacuum, Hydrogen, Helium
2.	Temperature range	16K÷323K
3.	Pressure in the Moderator Cell (*)	500 kPa
4.	Fast-neutron flux, E > 1 MeV	2.4×10^{12} n·cm^{-2}s^{-1}
5.	Thermal-neutron flux	1.0×10^{14} n·cm^{-2}s^{-1}
6.	Fluence of fast-neutrons	1.05×10^{20} n·cm^{-2}
7.	Fluence of thermal-neutrons	4.8×10^{21} n·cm^{-2}
8.	Cycles per year	20

(*): Maximum allowable ΔP between in H_2 chamber is 500.

Analysis of available alloys for Moderator Chamber

Aluminium alloys are widely used for manufacturing of Cold Neutron Sources on research reactors (Table 2). They have the best properties, corresponding to operational conditions of Moderator Chamber.

Table 2. Materials used for CNS production

Reactor	Reactor Power (MW)	Thermal Neutron Flux ($n.m^{-2}.s^{-1}$)	Moderator	Moderator Vessel Material	Comments
HFR, ILL Grenoble	57	$6x10^{18}$	L-D2,	A5 AL(99.5%AL)	Outer surface of moderator vessel is anodized to increase emissivity. Vacuum jacket is Zircaloy -2.
HFBR, Brookhaven	60	$3x10^{18}$	L-H2, subcooled	6061-T4; Al	Vessel was heat treated to T4 temper after welding.
Orphee, Saclay	14	$3x10^{18}$	L-H2	A286 (Fe-26Ni-15Cr)	
FRJ2, Julich	23	$1.2x10^{18}$	30%L-H+70%L-D	Al-3Mg, F18	Vessel is electron beam welded. Vacuum jacket is Al-3Mg, F18
DR3, Riso	10	$7x10^{17}$	H2, supercritical	Al-3Mg	Lifetime exposure of the vessel is set at $4.5x10^{26}n.m^{-2}$. Jacket is Al-3Mg.
FR2, Karlsruhe	43	$5x10^{17}$	L-H2		
EL3, Saclay	17	$5x10^{17}$	L-H2	Al-3Mg	
DLDO, Harwell	15	$4x10^{17}$	L-H2	Mg	
NBSR,NIST	20		L-H2	6061 Al	The first vessel was made from Mg alloy AZ3 1B. Welding problems prompted switch to 6061 aluminium welded with 4043 Al.
FRM-II, Munich	20	$8x10^{18}$	D2	6061T6	Expected start-up in early 2001. The vacuum jacket is Zircaloy-4.
OPAL	20	$2x10^{18}$	L-D2,	Al-5Mg	Vacuum jacket is Zr+2.5%Nb
CMRR, Mianyang	20	$2x10^{18}$	L-H2	Al-5Mg	Vacuum jacket is Al-3Mg

5456 and 5083 alloys are considered as possible alloys for production of Moderator Chamber.

Series 5000 and 6000 aluminium alloys are mainly used when fabricating cold neutron sources (CNS). Series 5000 alloys of the Al-Mg system are related to the non-heat-strengthened group, with high strengthening properties obtained by increasing magnesium concentration in the over saturated solid solution. One of the main advantages of these alloys are their high strengthening properties in comparing with heat-strengthened aluminium alloys of series 6000 in the annealed state. When welding series 5000 alloys, welded contacts have the strength, which almost equal to the initial material. Thus, in spite of series 6000 alloys have high strength after the heat treatment T6 (for example, 6061), it is impossible to carry out such heat treatment for accomplished CNS chamber assembly, and the assembly strength (made up of 6061 alloy) will be determined by the strength of the welds (annealed state).

Table 3 shows Chemical composition of series 5000 and 6000 aluminium alloys. Series 6000 alloys have more silicon (to 1.5%) and smaller magnesium (to 1%) concentration. Hence, they have different microstructures. Mg_2Si particles are main strengthening precipitation for series 6000 alloys but intermetallide precipitation of β-stage (Mg_5Al_8) are for series 5000 alloys.

Table 3. Aluminium alloys chemical composition limits

Alloy		Chemical elements						Standards
Brand Russia	Brand USA	Mg %	Mn %	Si %	Fe %	Cu %	Cr %	
	5052	2.2 – 2.8	0.1	0.25	0.4	0.1	0.15-0.35	B 209M
AMg-3		3.2 – 3.8	0.3 – 0.6	0.5 – 0,8	0.5	0.1	-	GOST 4784-74
	5154	3.1 – 3.9	0.1	0.25	0.4	0.1	0.15–0.35	B 209M
AMg-5		4.8 – 5.8	0.5 – 0.8	0.5	0.5	0.1	-	GOST 4784-74
	5083	4.0 – 4.9	0.4 – 1.0	0.40	0.4	0.1	0.05–0.25	B 209M
	5456	4.7 – 5.5	0.5 – 1.0	0.25	0.4	0.1	0.05–0.20	B 209M
AD33		0.8 – 1.2	0.15	0.4 –0.8	0.7	0.15-0.4	0.15–0.35	GOST 4784-74
	6061	0.8 – 1.2	0.15	0.4 –0.8	0.7	0.15-0.4	0.04–0.35	B 209M
SAV-1		0.45-0,9	0.06	0.7-1.2	0.2	0.01	-	Special technical conditions

Table 4. Aluminium alloys mechanical properties. (Sheets. Thickness to 6 mm)

Alloy	Heat treatment	Tensile strength	Yield strength	Total elongation	Standards
		σ_B, MPa	$\sigma_{0,2}$, MPa	δ, %,	
6061(AD33)	O	140	85	16	B 209 M-95
	T4	185	95	16	
	T6	260	220	10	
5083	O	175	115	16	
5456(AMg-5)	O	290	130	16	
AMg-3	O	195	100	15	GOST 21631-76
AMg-5	O	275	145	15	

2.5 Heat treatment types

AMg-5_O – complete annealing at T=310÷335 0C.

Welded joint strength for AlMg type alloys made with no consumable electrodes in automated arc welding of thin annealed sheets results in 0.8 ÷ 0.9 of initial metal strength, and no more [1].

2.6 Mechanical properties at cryogenic temperature

AMg-5 alloy mechanical properties in cryogen temperatures are well known and this is widely used in cryogenic systems production for a long time. In one's time, it was treated like an alternative material for the first stage of "Saturn-V" missile and its cryogenic tank for liquid oxygen and fuel [2]. Ultimate and yield strength of series 5000 alloys (5456 including) increase with temperature decrease from normal to 20K but ductility, estimated by total elongation and reduction is maintained high for this temperature span [3]. In cryogenic temperatures, welded joints of the alloy also exhibit high strength and ductility.

Aluminium alloys have face-centered cubic lattice. They can be used at cryogenic temperatures. Usually, these alloys don't have brittle temperature, and therefore keep ductility and strength at cryogenic temperatures. Mechanical properties of AMg-3 alloy [4] and for AMg-5 from [5] and mechanical properties of 6061-alloy (Figure 1) [6] on the temperatures are given as an example.

Table 5. Mechanical properties of AMg-5 alloys at cryogenic temperature

Alloy	Shape, Temp.	Temperature,	σ_B	$\sigma_{0,2}$	δ,
		K	MPa	MPa	%
AMg 5	Sheet - 2 mm, Annealing at 350 – 420 °C	293	300	130	23
		90	390	150	40
		77	420	160	44
		20	520	170	33

Figure 1. Tensile properties vs temperature for 6061-T6 aluminium. Stress concentration factor for

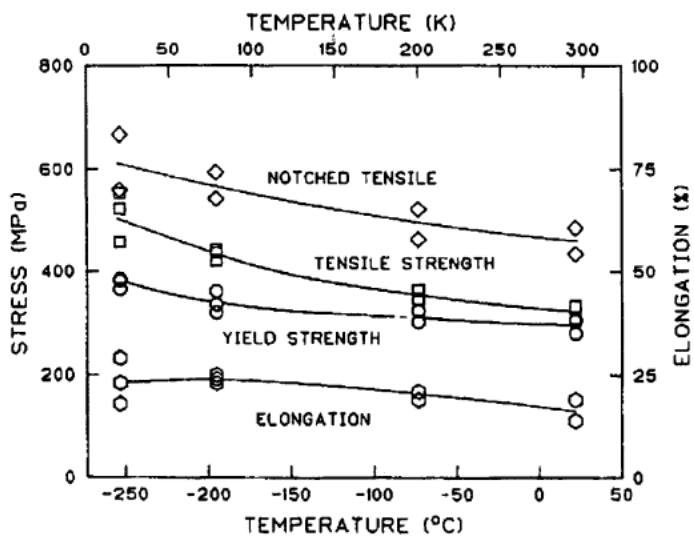

notched tensile specimens is Kt = 8 or 6,3.

2.7 Radiation Effect

There are not many data concerning neutron radiation influence on aluminium alloys. Available data show that when neutron fluence increases the strength properties increases but plasticity decreases. Considerable decreasing of elongation begins at fast neutron fluence of 10^{21} n/cm^2. (see Figure 2)

In normal temperature, the neutron irradiation impact on series 5000 alloys properties was considered in articles [9,10,11]. Substantial alterations of the mechanical properties begin from the fast neutron fluence more than 10^{21} n/cm^2. The strengthening properties σ_B and σ_{02} begin to increase with the ductility properties δ decreasing. Ductility decreasing is observed to the fluences 10^{22} n/cm^2, after which it is stabilized on the level of 3÷6%, dependent on the alloy type. The specimen fracture failures for series 5000 alloys were not found in the irradiation fluences up to $6 \cdot 10^{22}$ n/cm^2. At the same time,

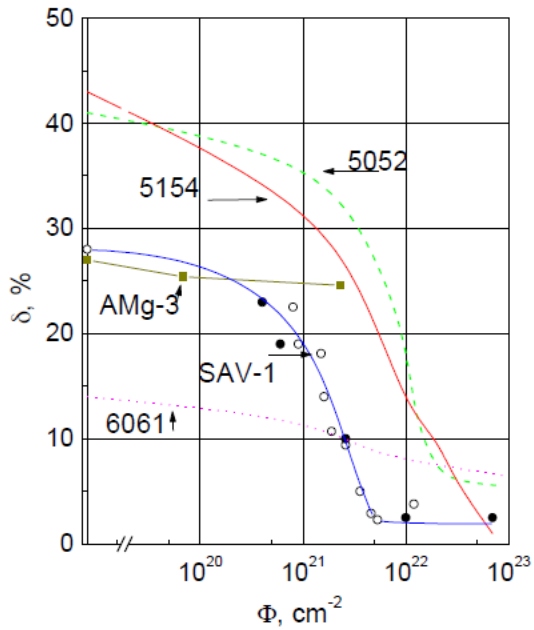

Figure 2. Elongation (δ) dependence for aluminium alloys 6061, 5154 and 5152 [7], SAV-1 [8], and AMg3 with fast neutron (E>0.1 MeV) integrated flux.

authors note the thermal neutron irradiation influence on the mechanical properties alteration of series 5000 alloys, with silicon creating from aluminium by the transmutation reaction: $^{27}Al(n, \gamma)\ ^{28}Al$, ^{28}Al – $^{28}Si + \beta$. The rated estimation on the silicon accumulation give the value of the order of 0.2% Si at $1x10^{22}$ n/cm^2 on thermal neutrons. At the rated fluence after 15 years of operation $5x10^{22}$ n/cm^2 about 1% Si is created, i.e. at the end of operation period we should have 6061-type alloy with the redundant magnesium content. It should be noted that at the transmutation conversions silicon is uniformly distributed in the matrix and diffusion is necessary for the strengthening precipitation Mg_2Si creation that is possible in aluminium at temperatures more than 160^0C.

The irradiation impact on the mechanical properties of the aluminium alloys at cryogenic temperatures is not properly studied. As shown in [12], fast neutron irradiation up to fluence of $6x10^{16}$n/cm^2 does not practically impact on 6061 and 7075 alloys mechanical properties. At the same time, irradiation of the pure aluminium with fluence of $1.2x10^{17}$ n/cm^2 at 4K results in increase of the electrical resistance a few times [13] and annealing at 300K absolutely eliminates radiation defects. The most part of defects collected, when CNS chamber material irradiated at cryogenic temperatures, may be expected to anneal by end of session and heating the chamber at 300K.

3. Allowable strength for aluminium alloys

In accordance with "AS 1210-1997" rule the allowable strength was defined as follows:

[σ] values for 6061 and 5083 alloys were taken from the table 3.3.1(E) p. 69-70;

for 5456 and AMg-5 the ones were defined in accordance with Appendix A, p. 289, as minimum from the following values:

$[\sigma] = \min(\sigma_B/n_B;\ \sigma_{0,2}/n_{0,2})$,

where n_B=3,5; $n_{0,2}$=1,5.

Table 6. Aluminum alloys allowable strength

Alloy	Heat treatment	Design tensile strength, AS 1210-1997 [σ], MPa	Design stress intensity, ASME [σ], MPa
6061	O	41	47
	T4	52	62
	T6	72	87
5083	O	69	73.8
5456(AMg-5)	O	83	87
AMg-5	O	79	92

4. REFERENCES

1 Nikolaev G.A., Fridlyander I.N., Arbuzov Yu.P. Welded aluminum alloys. M., «Metalurgia», 1990, p. 18.(in Russain).

2 D. M. Daley, D. C. Jefferis. Welding Journal, 1964, v.43, N1, pp34-42.

3 Rice L. P., Campbell J. E., Simmons W. F. Advances in Cryogenic Engineering, 1962, v. 7, pp.478-489.

4 V.I.Starcev, V.Ya.IL'ichev, V.V.Pustovalov. Plasticity and strength of materials and alloys at low temperatures. Metalurgia, M., 1975. (in Russian)

5 Yu. P. Solncev, G.A. Stepanov. Materials in cryogenic technique. Handbook "Mechanical engineering" Leningrad branch, 1982. (in Russian)

6 David J. Alexander. Materials for Cold Neutron Sources Cryogenic and Irradiation Effects. Oak Ridge, Tennessee USA. In International Workshop on Cold Neutron Sources; March 5-8, 1990, Los Alamos, New Mexico USA.

7 Shiller P. Aluminum as a material the first wall of ITOR. In the book "Construction materials for the nuclear fusion reactors. M., "Science ",1983. (in Russain)

8 Karasev V.S.,Mamich S.D. et all " Plasticity property SAV-1 alloy after irradiation in time of long operation in WWR-M reactor", VANT, series " Radiation Physic of damages and radiation material authority" 1989, issue.2(49), 39-40 (in Russian).

9 E. F. Sturcken, J. of Nuclear Materials, 1979, v. 82, pp. 39-53.

10 K. Farrell, J. of Nuclear Materials, 1981, v. 97, pp. 33-4,3.

11 E. Lijbrink et al. in Effects of Radiation of Materials, ASTM STP 782,1982, pp.765-778.

12 W. Weleff., in "Advances in Cryogenic Engineering, 1967, v. 11, pp. 544 – 556.

13 K. Nakata, et al., J. of Nuclear Materials, 1985, v. 135, pp. 32-39.